500Z 503V 507V 508V

19,100 in.^{3} - 19,200 in.^{3} - SHOPPING CARTS

MODEL	CAPACITY (in.^{3}) SHOPPING	CAPACITY (in.^{3}) BASKET	NEST (in.)	WEIGHT (lbs.)	102X53' TRAILER	CHROME, NYLON BASKET MULTICOLOR POWDER	ONE COLOR POWDER OVER E-COAT	COMMENTS
500Z	19,200	14,700	13 1/2	68	440	Yes	Yes	Nest with 501S, 503V, 507V, 508V
503V	19,200	14,700	13 1/2	65	430	Yes	Yes	Nest with 500Z, 501S, 507V, 508V
507V	19,100	14,700	15 1/4	70	380	Yes	Yes	Nest with 500Z, 501S, 503V, 508V
508V	19,100	14,700	15 1/4	70	380	No	Yes	Nest with 500Z, 501S, 503V, 507V

500Z

FEATURES

Oval tube base - much stronger.
Double wire truss basket - stronger, lighter.
Drop down gravity assist baby seat - less likely to bind when nesting.
7 ga. (0.177) rear casters - stronger, cleaner, self aligning.
Integrated handle, rear casters, tube/truss between rear wheels - much stronger.
Accepts cup holder.
Accepts fresh basket in front of basket.

503V, 507V, 508V

Powder over E-coat - provides corrosion protection inside the tubing.
Integrated 1" tube, 1/4 X 1 1/2 caster plates - much stronger, cleaner.
Welded lower tray - lighter, quieter, protects powder.

507V, 508V

Accepts " bumpers " - less wear on powder.
Tubular bumper on base - protects front casters.

503W

Accepts " bumper / caster lifts " - easier to maneuvar line of nested carts, less wear on rear wheels, protects powder.

500Z (19,200 in.^{3})

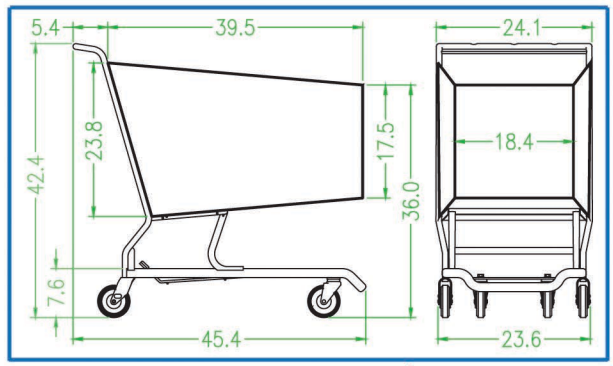

503V (19,200 in.^{3})

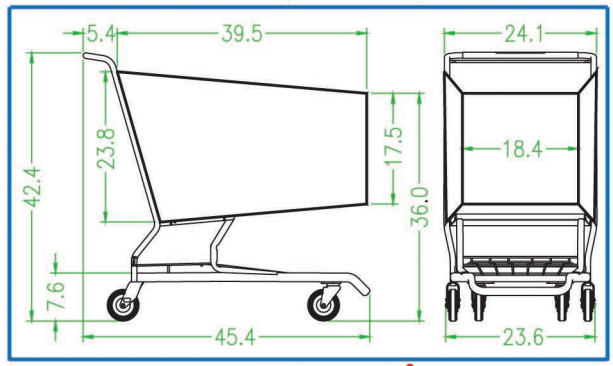

507V (19,100 in.^{3})

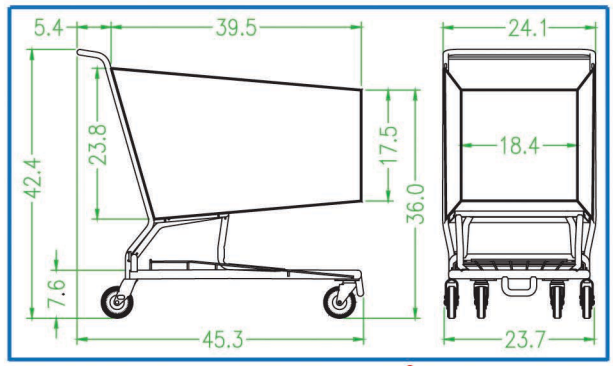

508V (19,100 in.^{3})

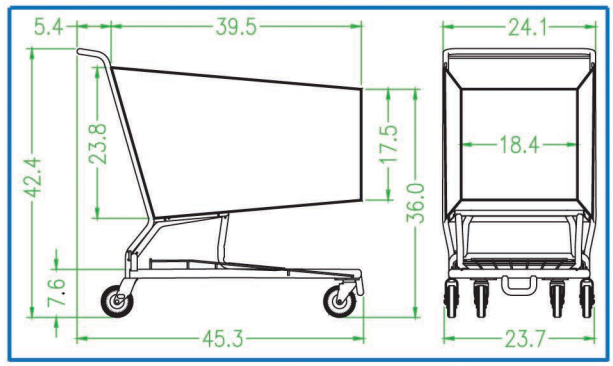

R.W.Rogers Company
610 S. Kirk Rd., St. Charles, Il 60174
Phone: 630-377-9033 * Fax: 630-377-2073
http://www.rwrogerscompany.com